CITY OF DUNEDIN
FIRE DEPARTMENT
STANDARDS

NOVEMBER 2014

INDEX FIRE DEPARTMENT STANDARDS

SHEET No	TITLE
FPS 1	EMERGENCY VEHICLE STABILIZED ACCESS STANDARD
FPS 2	SPEED BUMP STANDARD
FPS 3	DUMPSTER LOCATION STANDARD
FPS 4	REQUIREMENTS FOR FIRE HYDRANTS AND FIRE PROTECTION APPLIANCES
FPS 5	MINIMUM TURNING PATH, T-TURN & Y-TURN TURNAROUND ARRANGEMENTS
FPS 6	EXAMPLES OF FIRE LANE MARKINGS
FPS 7	FDC DETAIL
FPS 8	SUTPHEN SPH100 PLATFORM FIRE TRUCK SPECIFICATIONS

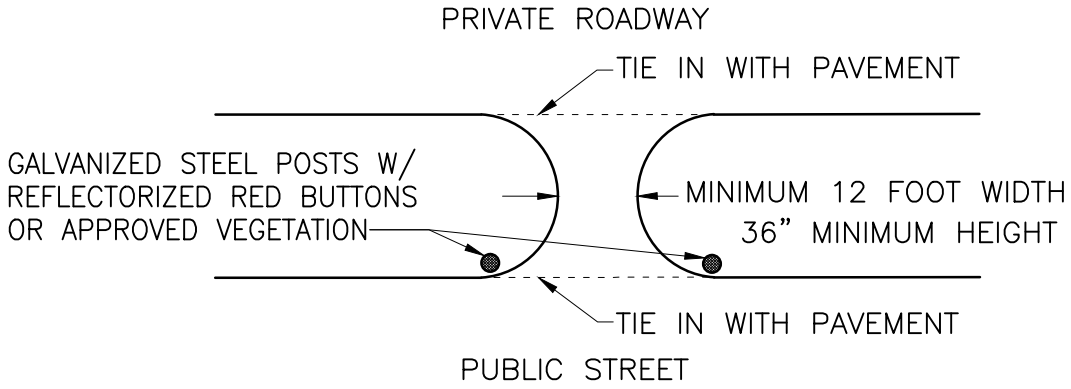

PLAN VIEW

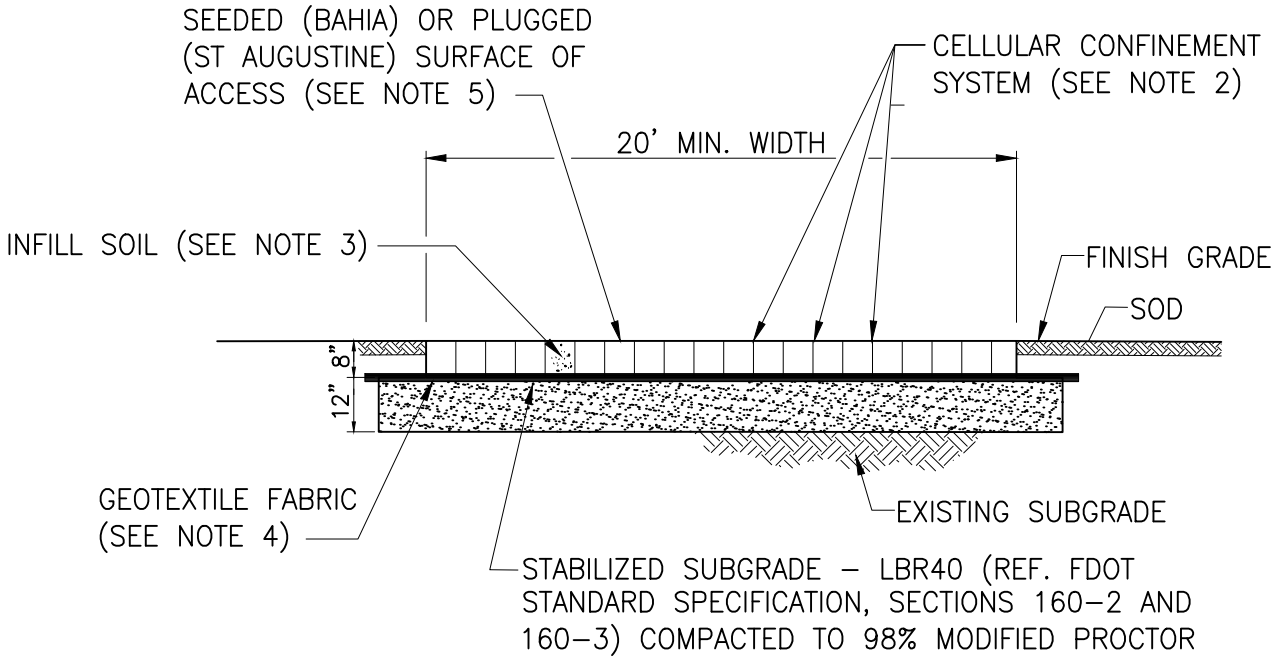

SECTION

NOTES:

1. DESIGN LOAD: H20
2. CELLULAR CONFINEMENT SYSTEM: PERFORATED TEXTURED, UV STABILIZED, GW20V (SMALL CELL) 8" CELL DEPTH BY PRESTO GEOSYSTEMS, OR EQUAL. ANCHOR IN PLACE IN ACCORDANCE WITH MANUFACTURE'S RECOMMENDATIONS.
3. INFILL SOIL: 50/50 MIX OF WELL GRADED CRUSHED STONES OR GRAVELS (FDOT No. 57 STONE) AND A PREPARED SOIL FAVORABLE TO TURF GROWTH (REFERENCE FDOT STANDARD SPECIFICATION, SECTION 162 FOR FINISH SOIL LAYER). MIXTURE MATERIAL PASSING #200 SIEVE SHALL NOT EXCEED 10% BY WEIGHT. PLACE MIXTURE INTO CELLS IN ACCORDANCE WITH MANUFACTURER'S RECOMMENDATIONS AND COMPACT TO 95% STANDARD PROCTOR.
4. GEOTEXTILE FABRIC: NONWOVEN, WITH 12" MINIMUM OVERLAP AT JOINTS. MIRAFI 140N OR EQUAL.
5. CONTRACTOR/DEVELOPER SHALL WATER AND FERTILIZE ACCESS UNTIL TURF IS ESTABLISHED. ACCESS WILL NOT BE ACCEPTED IF, IN THE OPINION OF THE CITY INSPECTOR, THE TURF HAS NOT BECOME ESTABLISHED.

EMERGENCY VEHICLE STABILIZED ACCESS STANDARD

NOV 2014

NTS

FPS 1

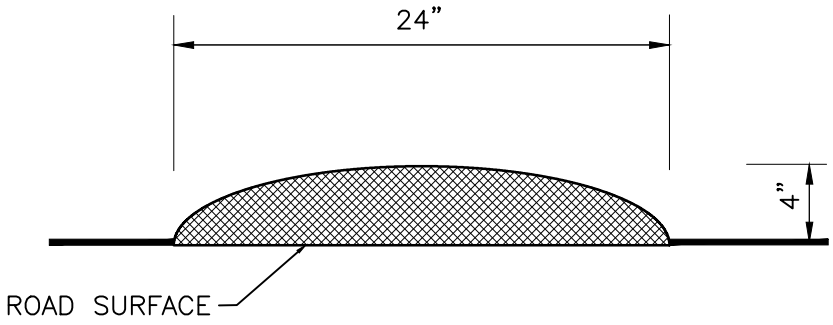

CROSS SECTION

NOT TO SCALE

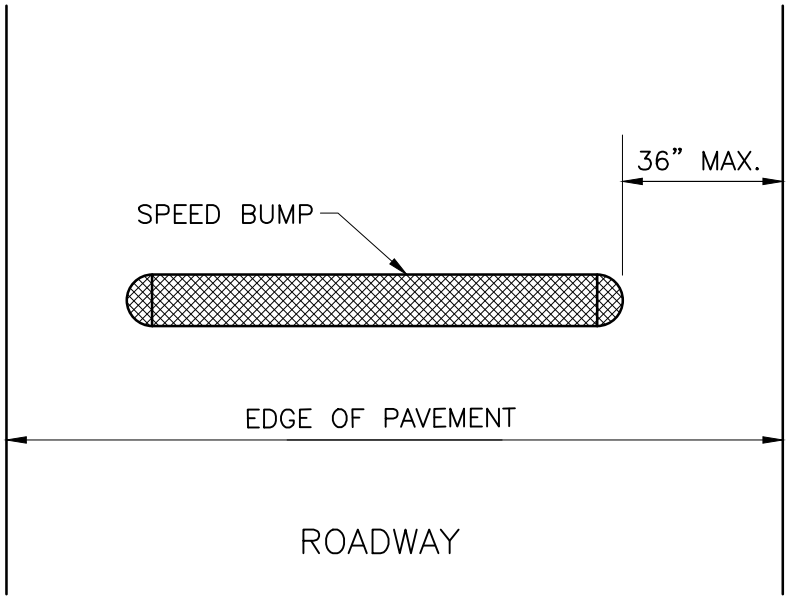

PLAN VIEW

NOT TO SCALE

SPEED BUMP STANDARD

NTS

NOV 2014

FPS 2

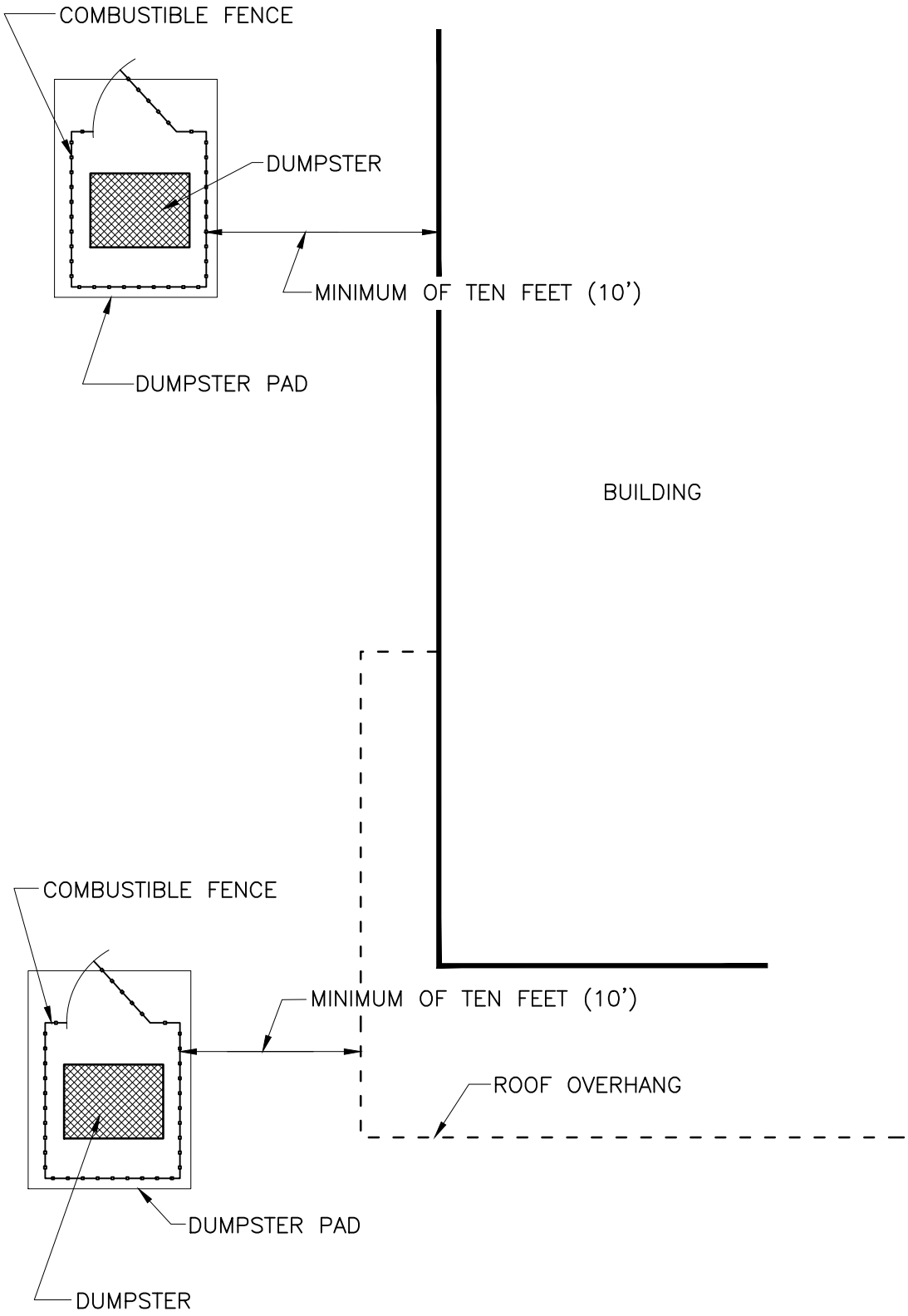

DUMPSTER LOCATION STANDARD

NTS

NOV 2014

FPS 3

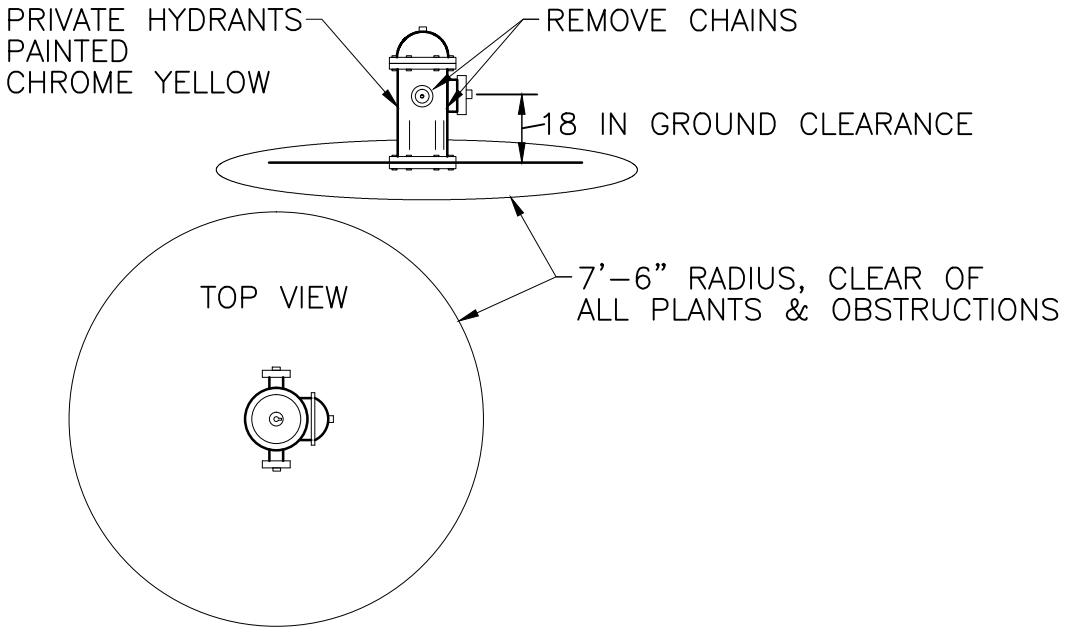

NOTES:

1. NO PERSON SHALL PLACE OR KEEP ANY POST, FENCE, VEHICLE, GROWTH, VEGETATION, TRASH OR STORAGE OF OTHER MATERIALS THAT WOULD OBSTRUCT A FIRE HYDRANT OR FIRE PROTECTION APPLIANCE AND HINDER OR PREVENT ITS IMMEDIATE USE BY FIRE DEPARTMENT PERSONNEL. SUCH FIRE PROTECTION APPLIANCE SHALL BE MAINTAINED READILY VISIBLE AT ALL TIMES. (NFPA 1, SECTION 18.3.3.1)
2. FIRE HYDRANTS AND FIRE PROTECTION APPLIANCES SHALL BE KEPT ACCESSIBLE TO THE FIRE DEPARTMENT AT ALL TIMES. THE FOLLOWING CLEARANCES SHALL BE MAINTAINED FOR ALL FIRE HYDRANTS AND FIRE PROTECTION EQUIPMENT:

   - HYDRANTS: CLEARANCES OF SEVEN AND ONE HALF FEET (7 FT–6 IN) IN FRONT OF AND TO THE SIDES OF THE FIRE HYDRANT, WITH FOUR FOOT CLEARANCE TO THE REAR OF THE HYDRANT. (NFPA 1, SECTION 18.3.4.1)
   - FIRE PROTECTION APPLIANCES OF SEVEN AND ONE HALF FEET (7 FT–6 IN) IN FRONT OF AND TO THE SIDES OF THE APPLIANCES. (NFPA 1, SECTION 18.3.4.2)

REQUIREMENTS FOR FIRE HYDRANTS AND FIRE PROTECTION APPLIANCES

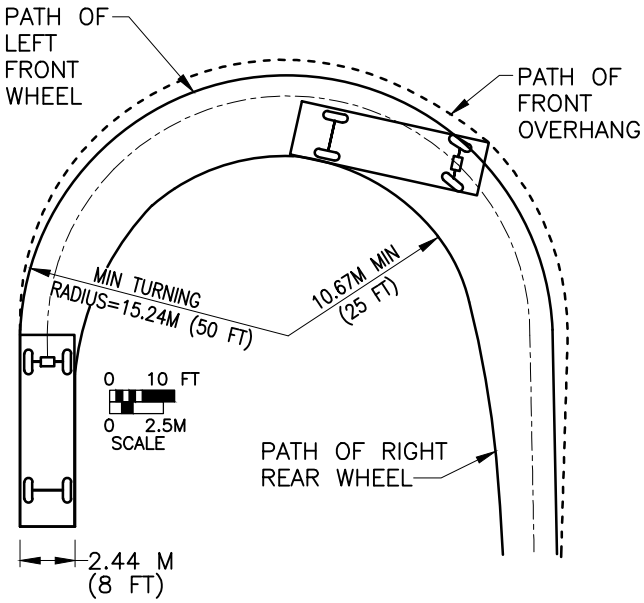

- ASSUMED STEERING ANGLE IS 31.7°
- CTR = CENTERLINE TURNING RADIUS AT FRONT AXLE

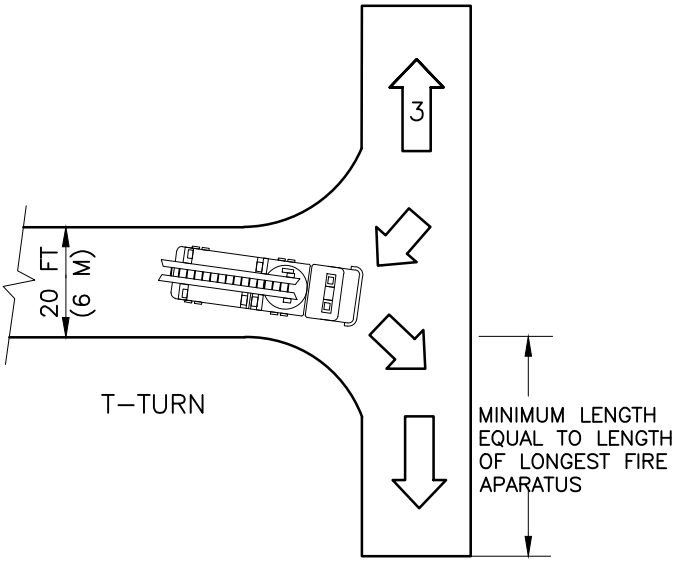

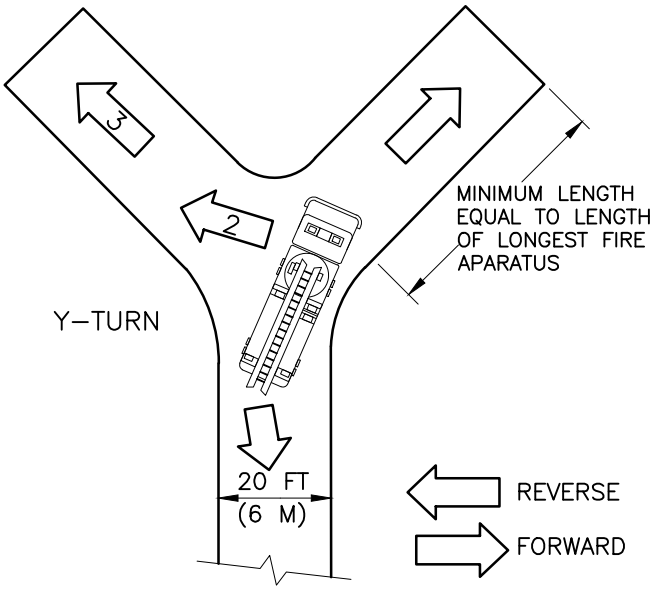

MINIMUM TURNING PATH, T–TURN & Y–TURN TURNAROUND ARRANGEMENTS

NOV 2014

NTS

FPS 5

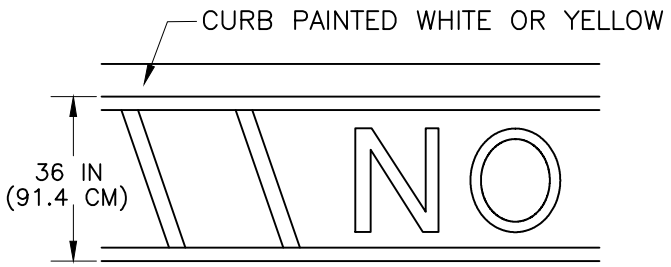

3–IN. (7.6–CM) WHITE OR YELLOW LINES WITH
24–IN. (61–CM) HIGH LETTERS IN WHITE OR YELLOW
"FIRE LANE NO PARKING"
PAINTED ON PAVEMENT

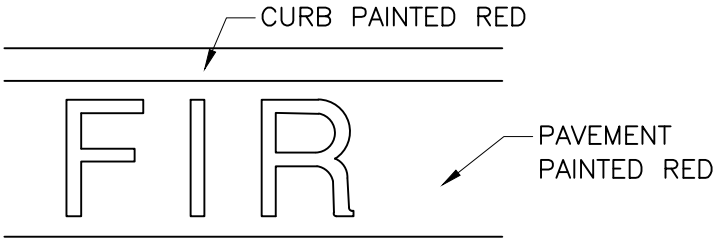

24–IN. (61–CM) HIGH WHITE LETTERS ON
SOLID BACKGROUND
"FIRE LANE NO PARKING"

REFLECTIVE WHITE
BACKGROUND WITH BLACK
"P" AND RED "NO" SYMBOL

WHITE REFLECTIVE BACKGROUND
WITH RED LETTERS

EXAMPLES OF FIRE LANE MARKINGS

NTS

NOTE:
FDC SHALL BE PROVIDED WITH SIGNAGE STATING BUILDING BEING SERVED, LOCATION, AND FIRE PROTECTION SYSTEM BEING PROVIDED AND SET UP TO BE LIKE TRAFFIC SIGN

FDC SERVES
BUILDING NAME
(ADDRESS)
FIRE SPRINKLER SYSTEM

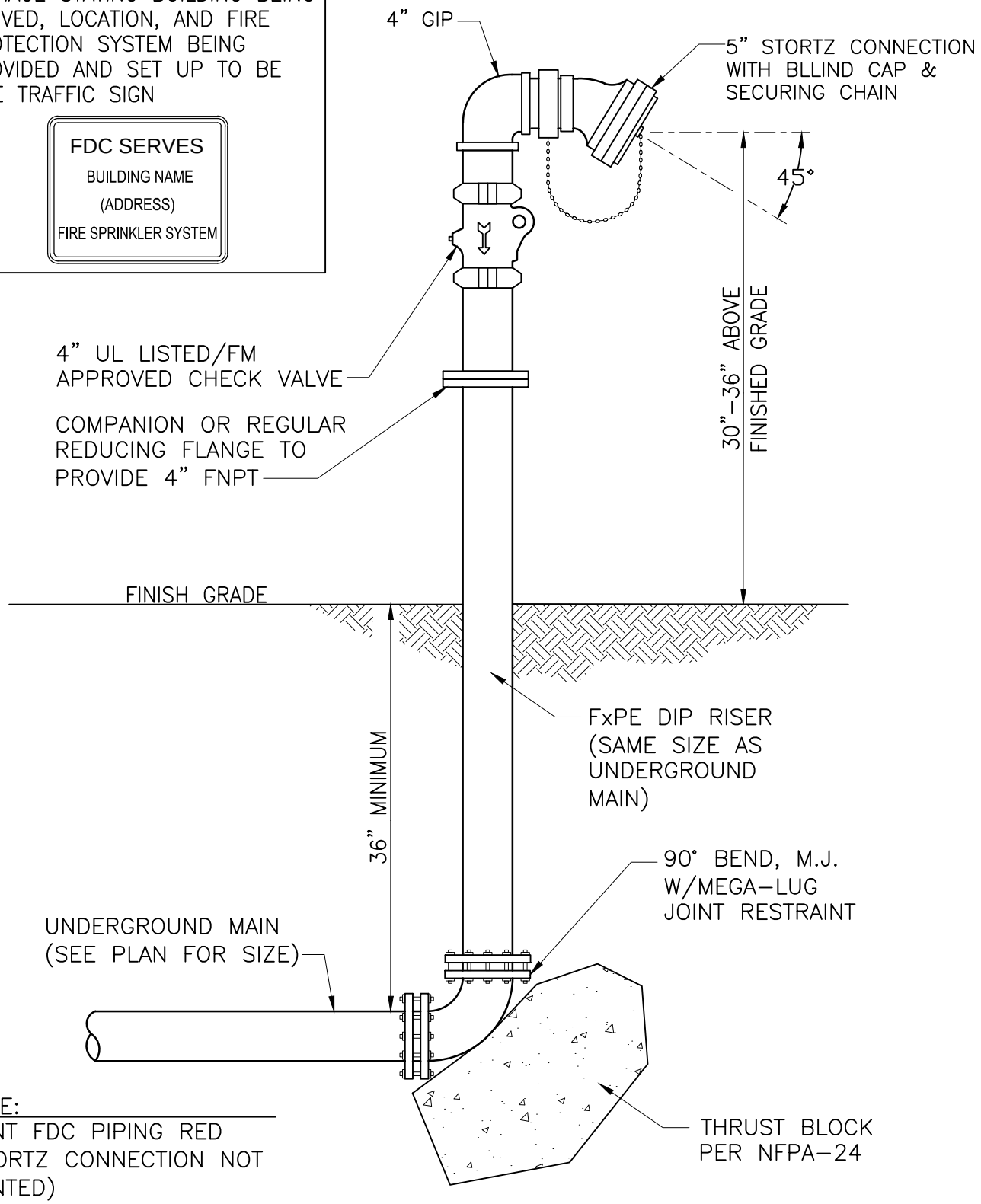

NOTE:
PAINT FDC PIPING RED (STORTZ CONNECTION NOT PAINTED)
CHECK VALVE SHALL BE APPROVED BY FIRE PROTECTION SYSTEM ENGINEER FOR BUILDING

FDC DETAIL

NTS

NOV 2014

FPS 7

SUTPHEN SPH100 PLATFORM FIRE TRUCK SPEC.

NOV 2014

NTS

FPS 8

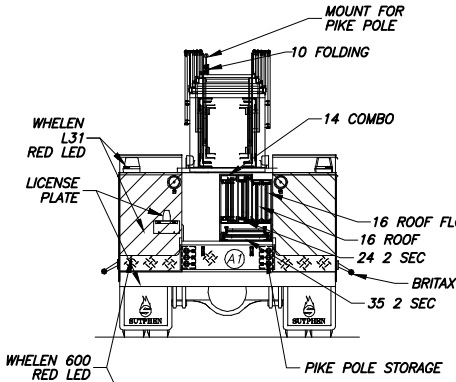

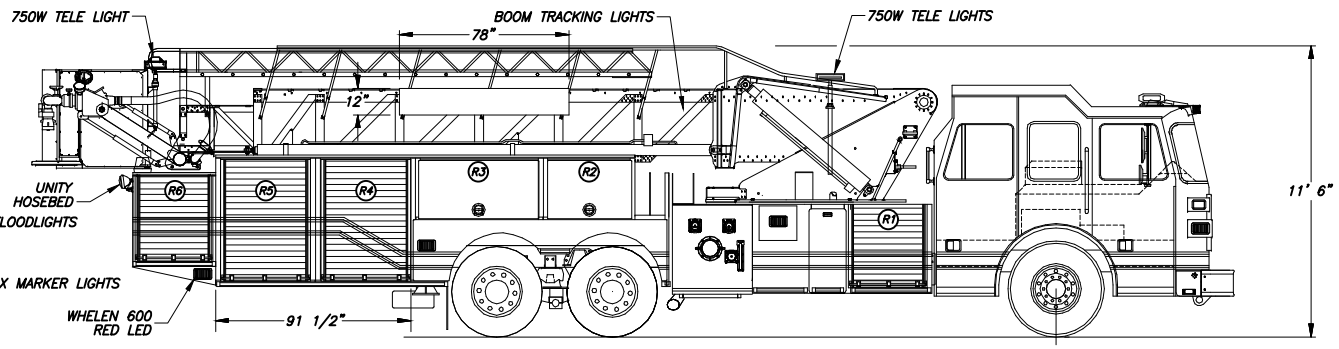

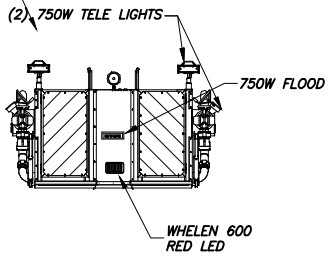

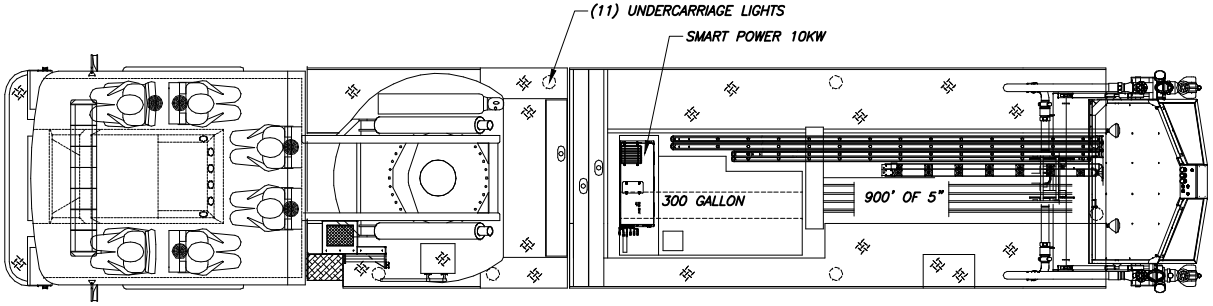

NOTE: T TURNAROUND FOR SPH 100 = 47' IN LENGTH

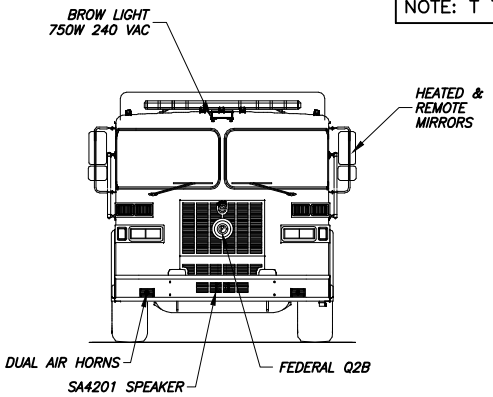

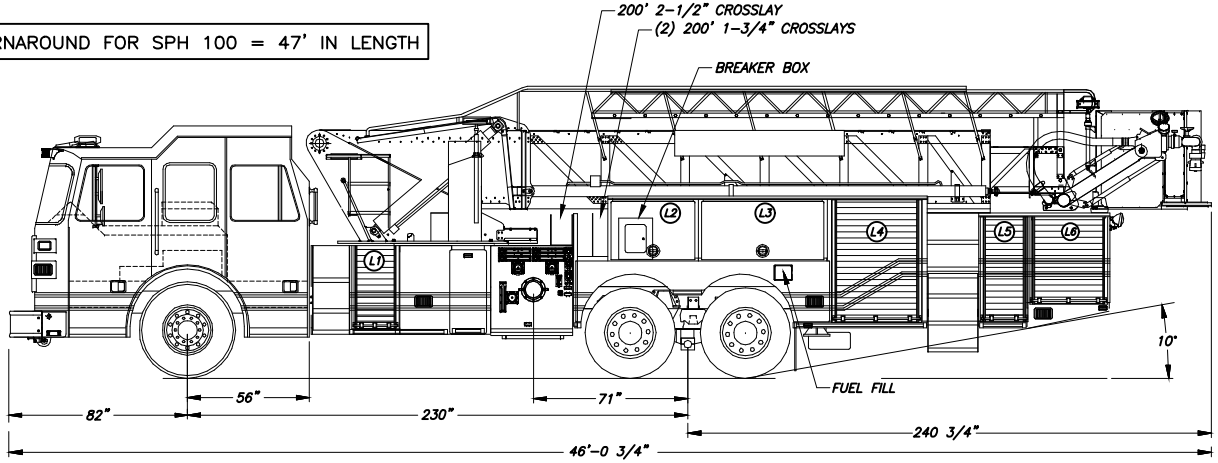

LEFT SIDE

DOOR OPENINGS / COMPARTMENT DIMENSIONS

COMPT.	HEIGHT	WIDTH	HEIGHT	WIDTH	DEPTH
L1	31 1/2	13 1/2	38 1/2	20 1/4	20 1/4
L2	23	33 1/4	27 1/2	41 1/2	12 1/8
L3	23	50 1/4	27 1/2	58	12 1/8
L4	48 1/2	38 3/4	56 1/2	45 3/4	26 1/2
L5	40 1/2	15 1/8	48 1/2	22	26 1/2
L6	32 1/8	30 7/8	40 1/8	34 3/4	26 1/2

RIGHT SIDE

DOOR OPENINGS / COMPARTMENT DIMENSIONS

COMPT.	HEIGHT	WIDTH	COMPT.	WIDTH	DEPTH
R1	31 1/2	33 1/2	38 1/2	40	27 1/2
R2	23	33 1/4	27 1/2	41 1/2	26 1/2
R3	23	50 1/4	27 1/2	58	26 1/2
R4	48 1/2	38 3/4	56 1/2	45 3/4	26 1/2
R5	48 1/2	38 3/4	56 1/2	45 3/4	26 1/2
R6	32 1/8	30 7/8	40 1/8	34 3/4	26 1/2

TOTAL COMPARTMENT VOLUME - 293 CU FT.

REAR COMPARTMENT

DOOR OPENINGS / COMPARTMENT DIMENSIONS

COMPT.	HEIGHT	WIDTH	HEIGHT	WIDTH	DEPTH
A1	9 1/8	24 1/2	9 7/8	26	88

SUTPHEN

THE INFORMATION PRESENTED ON THIS DOCUMENT IS TO BE USED FOR ILLUSTRATIVE PURPOSES ONLY AND IT MAY NOT REFLECT, AESTHETICALLY OR OTHERWISE, PAST OR PRESENT MANUFACTURED PRODECTS. SUTPHEN CORPORATION RESERVES THE RIGHT TO MAKE CHANGES IN THE DESIGN OF OUR PRODUCTS AT ANY TIME, WITHOUT NOTIFICATION.

Proprietary data is included in the information disclosed herein and is the sole property of THE SUTPHEN CORPORATION. This information is submitted in confidence and neither this document not the information disclosed herein shall be reproduced or transferred to other documents or disclosed to others for manufacturing or for any other purposes except as specifically authorized in writing by the SUTPHEN CORPORATION.

The undersigned approves this data for construction in accordance with any changes as indicated on these drawings.

APPROVED BY: _____ DATE: _____
(Authorized Fire Dept. Representative)

SALES REPRESENTATIVE: _____ DATE: _____

REV.	DESCRIPTION	BY	DATE

SUTPHEN CORPORATION
7000 COLUMBUS-MARYSVILLE ROAD
AMLIN, OHIO 43002

DR. T.STILES	SPH 100'	NO REQ'D
DATE 3/29/12		DWG NO. SAMPLE SPH
SCALE NONE	TOL.	